IKEBANA ENGINEERING LIMITED ENGINEERING DRAWING : HEAT SHRINKABLE CABLE ACCESSORIES	PRODUCT	6 FINGER LV BREAKOUTS
	MODEL	IXL 640
	DOCUMENT NO.	DR/MFG/640
	PAGE	1 OF 1

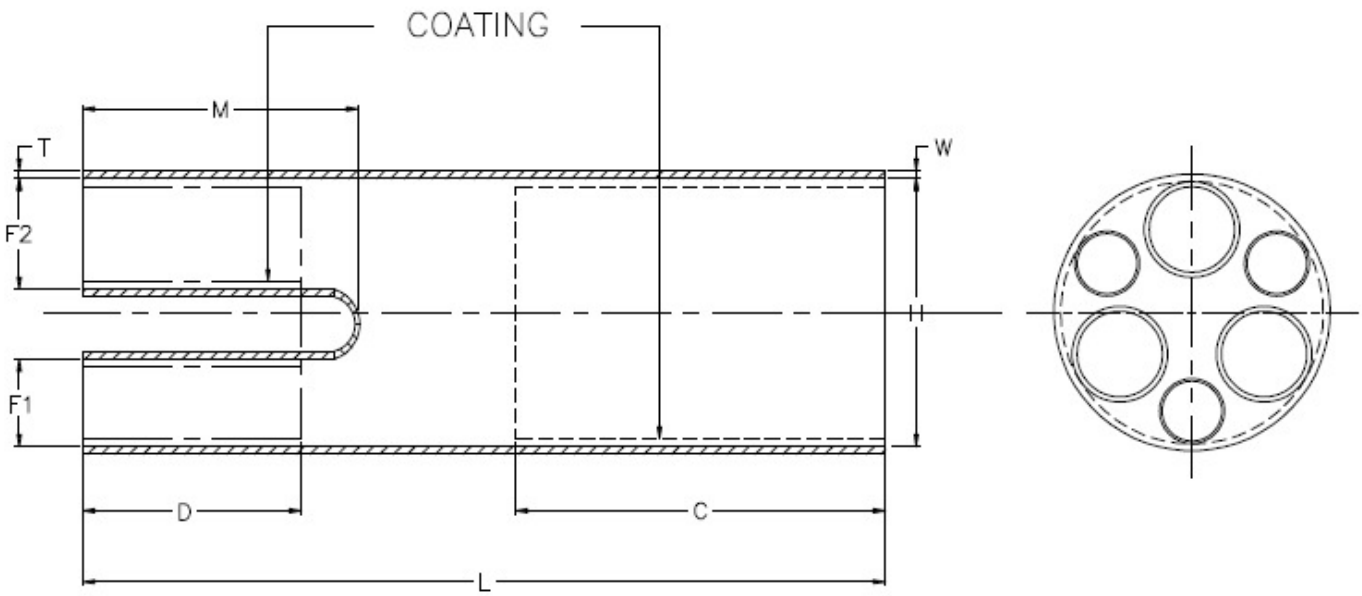

SIX FINGER BREAKOUTS

MODEL	H	EXP–H	F1	EXP–F1	F2	EXP–F2	L	EXP–L	M	EXP–M	C	D	W	T
LV	S	E	S	E	S	E	S	E	S	E	E	E	S	S
IXL640	33	100	6	19	12	38	215	170	50	40	75	30	4.2	3.2

E : DIMENSION WHEN EXPANDED
S : DIMENSION WHEN FULLY RECOVERED

NOTES:

1. ALL DIMENSIONS ARE IN MM.
2. TOLERANCES :

THICKNESS	W & T	± 10%
LENGTHS	L,M,EXP–M,C&D	± 10%
DIAMETERS	H,EXP–H,F,EXP–F	± 5%

REVISION NO.	0	FIRST ANGLE PROJECTION		SCALE : NTS	ALL DIMENSIONS IN MM.
DATE	11/11/11	DRAWN BY :	Whanuthaphong	APPROVED BY :	SANJEEV NABAR

IKEBANA ENGINEERING LIMITED
Ratchaburi Industrial Estate, 155/47 Moo 4, Phetkasem Road,Chetsamian,
Photharam, Ratchaburi 70120. THAILAND.
Tel.: +66 32 375811 to 813Fax : +66 32 375810
E-mail: snabar@ikebana-heatshrink.com

KNILL GRUPPE